Instructions for use

HOME DELUXE
WIR MACHEN ZUHAUSE

Solar shower
ATHEN



Original instructions for use

ATTENTION:

Read the instructions completely and carefully before installation and commissioning. It contains important information on assembly and use.

IMPORTANT:
KEEP FOR FUTURE REFERENCE. READ CAREFULLY!

Table of contents

1. General 3
1.1. Product overview 3
1.2. General information 3
1.3. Warranty 3
2. Information on the instructions for use 3
2.1. Availability of the instructions for use 3
2.2. Target groups of the instructions for use 4
2.3. Translation information 4
2.4. Explanation of symbols 4
2.5. General information on the instructions for use 4
2.6. Intended use 5
2.7. General safety instructions 5
3. Product features 6
3.1. Technical data 6
3.2. Product description 6
4. Scope of delivery 7
5. Assembly 7
5.1. Safety instructions 7
5.2. Structure of the product 8
6. Application 9
6.1. Safety instructions 9
6.2. Initial commissioning 9
6.3. Operation 10
6.4. Storage location 11
7. Troubleshooting 11
8. Maintenance and care 12
8.1. Safety instructions 12
9. Disassembly 12
9.1. Safety instructions 12
9.2. General notes 12

Dear customer,

Thank you for choosing a product from **Home Deluxe GmbH.** We hope you enjoy your new ATHEN solar shower.

The instructions for use support you during installation, commissioning, operation and maintenance of the product. The instructions for use and the safety instructions must be read carefully and in full all the time. Observe these instructions to avoid dangers.

1. General

1.1. Product overview

Model: Solar shower ATHEN | Item ID: 20240 | Variant ID: 49147

1.2. General information

In order to live up to our claim, we are constantly improving the quality, simplifying the assembly, operation or adapting the products to the customer's wishes. Due to these changes, the current version of the instructions for use can be found on our homepage.

The term "product" is used in the instructions for use for the "ATHEN solar shower".

1.3. Warranty

The statutory liability for defects and warranty rights apply from the date of purchase.
Home Deluxe GmbH accepts no liability for damage caused by failure to observe the instructions for use. Complaints resulting from improper assembly or use are excluded from the warranty. In the event of defects to the product, please contact our customer service in writing, stating the product name, the serial number and a photo of the type plate:

Home Deluxe GmbH
Schanzeweg 2
32312 Lübbecke
Germany
Tel.: +49 (0)5743 6181-0
E-mail: info@homedeluxe.de
www.home-deluxe-gmbh.de

If you have any further questions, please contact our customer service.

2. Information on the instructions for use

2.1. Availability of the instructions for use

The instructions for use are part of the product and should be kept complete and in the immediate vicinity of the product.

2.2. Target groups of the instructions for use

The instructions for use must be read and observed by every person involved in any of the following activities or use:

- Unpack
- Assembly / Installation
- Commissioning / Operation
- Maintenance / Testing / Care
- Troubleshooting / Repair
- Disposal

2.3. Translation information

The original instructions for use were written in German. Any other language available is a translation of the German version.

2.4. Explanation of symbols

Symbol	Explanation of symbols
	**WARNING** The symbol indicates possible hazards that can cause fatal and serious injuries. Before carrying out the corresponding assembly or application step, the corresponding note must be read.
	**INFO** The symbol gives important information and indicates damage to property. Observe these before carrying out the corresponding assembly or application step in order to understand problems and avoid damage.
	**CE marking** The symbol declares the conformity of the product with the applicable requirements of the European Community. The current declaration of conformity is available from Home Deluxe GmbH on request.
	**Read instruction manual** The symbol indicates that the instructions for use must be read carefully before assembly/installation and/or operation of the appliance.

2.5. General information on the instructions for use

The instructions for use refer to the ATHEN solar shower. It contains important information on installation, operation, maintenance and cleaning. The instructions for use, in particular the safety instructions, must be read carefully before the product is put into operation. Only use the product as described in these instructions for use to prevent accidental injury or damage. If you pass the product on to third parties, these instructions for use must also be handed over.

2.6. Intended use

The product is of high quality, durable and intended or suitable exclusively for private use to a reasonable and customary extent. Furthermore, our product is **not intended for** commercial use. Commercial use is only permitted with the written consent of Home Deluxe GmbH.

The product is intended as a solar shower for the garden and should be placed in a sunny location.

Only use the product as described in these instructions for use. Any other use is considered improper and may result in damage to property or personal injury. The manufacturer accepts no liability for damage caused by improper or incorrect use.

2.7. General safety instructions

General hazard warnings



- Improper handling can lead to considerable personal injury and damage to property. For this reason, assembly, installation, commissioning, troubleshooting, maintenance and repair work may only be carried out by qualified persons.
- **Only** assemble the product if the scope of delivery is complete and in perfect condition.
- Make sure that all parts are undamaged and properly assembled. Improper assembly may result in injury. Damaged parts can affect safety and function.
- Only place the product on a safe, level and solid surface.
- Do not make any changes to the product
- Check the fastening at regular intervals.

Danger for children



- Keep children away from packaging materials. There is a risk of suffocation, among other things!
- Keep children away from the product.
- Keep children away from the assembly site while assembling the product. The scope of delivery contains small parts that can be swallowed or cause serious injuries.
- **Danger of tipping over!** The product is not a children's toy or climbing device. If the product is loaded on one side, it can fall over, which can result in death.
- Children can injure themselves when pulling up the product.
- Do not place the product directly or in the immediate vicinity of a play area.
- Explain to children how to use the product properly and supervise them while using the product, never leave them unattended.
- Remove all sharp objects, broken glass or stones from the vicinity of the product. Make sure that playing children are not endangered.
- Make sure that small children do not put small parts in their mouths.

Risk of injury
Improper handling of the product can lead to injuries

- Check the product for visible damage before each use.
- Do not make any constructive changes to the product. Any modification must be authorised in writing by the manufacturer and carried out in accordance with the instructions.
- If the product is damaged, it must no longer be used. Damaged parts must be repaired or replaced with original spare parts.
- Make sure that the product is permanently installed to prevent injuries.

Risk of damage

- Improper handling of the product can lead to damage.
- Do not open the packaging with sharp objects (e.g. knife, scissors or similar), as this may damage the product. Be careful when opening.
- **Tipping hazard:** Do not climb on the product, there is a risk of falling and tipping.

3. Product features

3.1. Technical data

Solar shower ATHEN	
Height	2220 mm
Foot plate	250 x 135 mm
Shower head	155 x 155 mm
Operating pressure	max. 3 bar
Potion volume	30 l
Weight	11,5 kg
Material	Stainless steel

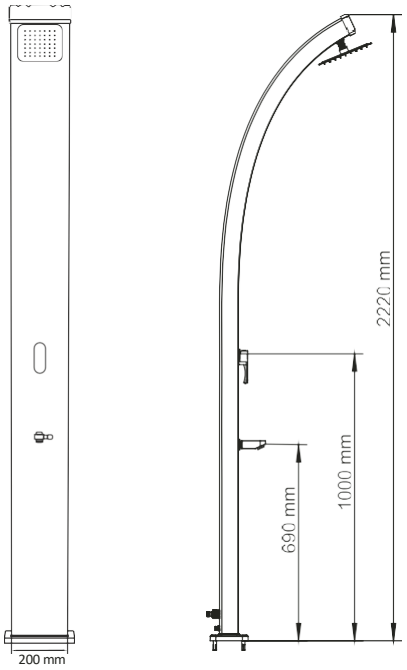

3.2. Product description

A pleasant warm shower in your own garden without an additional electricity connection - the ATHEN solar shower makes this dream possible! The shower water is heated in its own tank using solar energy. Enjoy the refreshing outdoor shower with many advantages. The environmentally friendly solar operation saves costs. The feeling of showering in the open air is unique. The stainless steel tropical shower is fed by a normal garden hose in a 30 litre tank. This also allows longer showers with the pre-heated water. Pamper yourself with the ATHEN solar shower and contribute to sustainability at the same time.

4. Scope of delivery

Check the packaging for external damage upon delivery. Furthermore, immediately after unpacking, check that the scope of delivery is complete and that the product and all components are in perfect condition. Only assemble the product if the scope of delivery is complete and undamaged.

Components/Parts

No.	Description	Number	Images
1.	Solar shower with tank	**1**	
2.	Shower head incl. mounting material	1	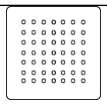 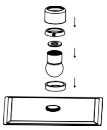
3.	Foot wash tap	1	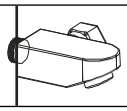
4.	Adapter for water inlet	1	
5.	Fixing screw	4	
6.	Plug for drain	1	

5. Assembly

5.1. Safety instructions

All health and safety information must be read.

Risk of injury

Improper handling during assembly can lead to injuries



- Please make sure that the package is opened at the top.
- Immediately after unpacking, check that the delivery is complete and that the product and all parts are in perfect condition.
- **Only** assemble the product if the scope of delivery is complete and in perfect condition.
- Only place the product on a safe, level and solid surface.
- Secure the product firmly to a suitable foundation.
- Be sure to observe the mounting dimensions and use the mounting material supplied.
- Operating errors, assembly errors or damage caused by assembly are excluded from the warranty.
- At least 2 people are required to assemble the product.
- Wear protective clothing such as safety shoes and protective gloves during assembly.

5.2. Structure of the product

The product is delivered disassembled and can be assembled with little effort. Follow the assembly instructions carefully. If they are not followed, the function and safety of the product cannot be guaranteed and damage to property, personal injury or even death may result.

Tools needed

Allen key	Measuring tape
Masonry drill	Hammer
Pencil	Cutter knife
Drilling machine	Spirit level

-The following instructions must be read carefully.

- Mount the product in a sunny location, it should get as many hours of sun as possible and as little shade as possible.
- **Recommendation!** To achieve good stability and safety, the product should be mounted on a stable, firm foundation.
- When assembling, make sure that the product (surfaces and individual parts) are not damaged.
- Make sure that the water can run off or seep away after showering. (We recommend installing the product near a drain).

Figure	Set-up step
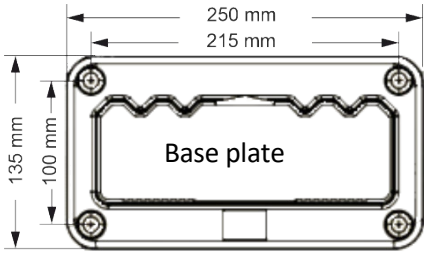 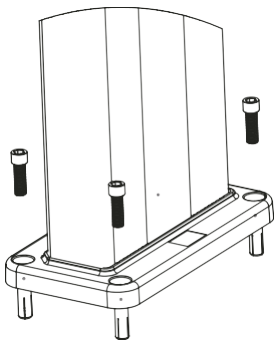	**Step 1: Set up product** - The product is attached to the base via the base plate. - Use the base plate to mark the positions of the fixing holes to be drilled. - Drill the holes with a Ø 12 mm masonry bit, - Drill 45 mm deep into the foundation. - Push the anchor bolts into the drill holes. - Screw the product into the foundation with the fastening screws. **Be careful not to damage the product in the process.**

Figure	Set-up step
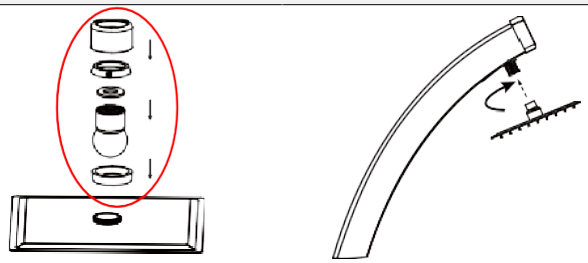	**Step 2: Mount the shower head** - Fit the connection accessories to the shower head. (**see marking**) - Then mount the shower head on the product.
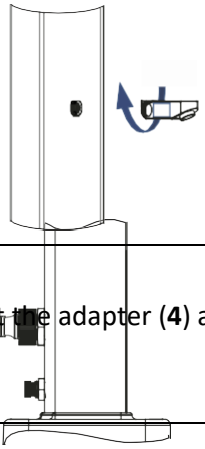	**Step 3: Fitting the foot wash tap** -Assemble the foot wash tap on the pro- duct. **Make sure that the strainer is facing downwards after assembly.**
 4 6	**Step 4: Mount adapter and sealing plug** -Fit the adapter (**4**) and the plug (**6) to** the product.

6. Application

6.1. Safety instructions

The following health and safety information must be read carefully. This product can be damaged by improper use.

Risk of injury
Improper handling during operation can lead to injuries



- Do not use a damaged product.
- Do not make any changes to the product.
- The product is not a children's toy, climbing wall or sports equipment. Children are not allowed to play with the product.
- Check the fastening at regular intervals.
- Children may only use the product under supervision.
- **Danger to life! Do** not use the product during thunderstorms and lightning.
- **Danger of burns!** In strong sunlight, the water in the tank can heat up considerably (up to 60°C).
  - Set the mixer tap to the cold position (blue) before showering.
  - Open and slowly turn the mixer tap towards warm (red).

6.2. Initial commissioning

Check the product for damage before using it for the first time. The product may only be used if it is undamaged.

Check the product for leaks during initial operation (first filling with water); if water is still dripping, tighten the corresponding parts.

6.3. Operation

Check before using the product,

- the proper condition.
- All fixings

Illustration	Functions
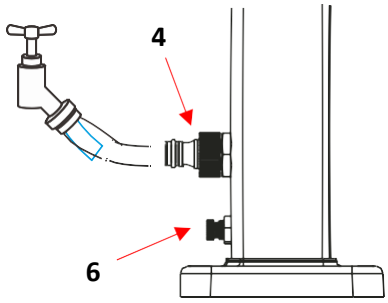	**Fill up the tank** The water pressure during operation is 3 bar. - Connect the garden hose to the adapter (**4**). - Make sure that the sealing plug (**6**) is closed. - Set the mixer tap to the position "**Warm**" and set the lever to the "**on**" position. - Open the house water tap and fill the tank of the product. - When the tank is full, the water runs out of the shower head. - The lever of the mixer tap can be returned to the "off" position. **Note:** After the mixer tap has been turned off, the water drips for a while. This is **not a** defect.
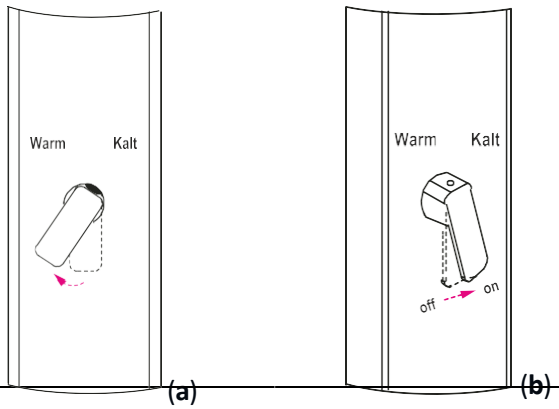	**Set temperature** - Turn the mixer tap to the position "**Warm**", the water gets warmer. - Turn the mixer tap to the position "**Cold**", the water gets colder. **Set shower "On/Off** - Pull the lever of the mixer tap outwards, the water runs out of the shower head. - Push the lever back again, the water flow is interrupted
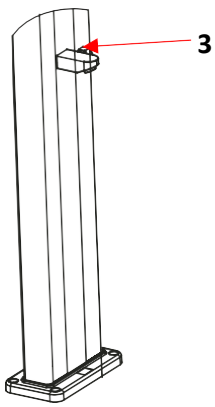	**Foot wash tap "On/Off** - Turn the foot wash tap (**3**) on the side "**open**" or "**closed**".

Figure	Functions
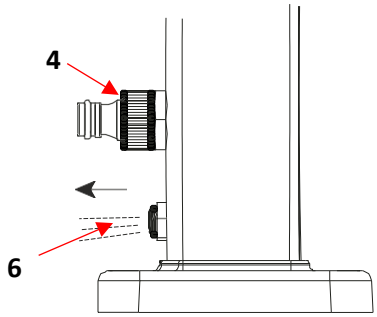	**Empty the water tank** - Remove the garden hose from the adapter. ter (**4**). - Open the sealing plug (**6**). - Set the mixer tap to "**On**", the water

6.4. Storage location

- In winter, the water **must** be completely drained from the tank!
- Failure to follow this instruction may cause the tank to burst due to freezing of the water.
- If possible, dismantle the product and store it and its accessories in a dry, well-ventilated place that is as protected from the weather as possible during the winter season.

7. Troubleshooting

If the following faults occur during operation, please check the following fault causes using the following table. If the fault cannot be remedied by the measures listed, take the product out of operation.

Error	Possible cause	Solution
The product wobbles or vibrates	- The product stands on uneven, unstable ground - The fixing screws have come loose	- Place the product on a flat, stable surface. - Tighten the fastening screws
The product drips from the shower head or foot wash tap	- Mixer tap is not properly closed - Foot wash tap is not closed properly	- Mixer tap set to "**Off** - Close foot wash tap
The product drips at the connections (shower head, foot wash tap, adapter or sealing plug).	- Connections are leaking	- Retighten connection
Water is not called properly on	- Too little sunlight - The product is covered	- Find a place with more sunlight - Remove cover

If another problem occurs with the product, contact us.

8. Maintenance and care

8.1. Safety instructions

Risk of damage
Improper handling during maintenance and care can lead to damage



- Do not use solvent-based or abrasive cleaning agents or tools, i.e. no hard sponges, brushes etc., otherwise the product will be damaged.
- Only use original spare parts, these are made for the product and do not cause any damage to the product.

9. Disassembly

9.1. Safety instructions

Risk of injury
Improper handling during disassembly can lead to injuries



- The product has a high weight and large dimensions, at least 2 persons are required for disassembly.
- Secure the product against falling before disassembly.

Disassembly of the product must be carried out in reverse order to assembly. (**see chapter Assembly**)

9.2. General notes



- Dispose of the product and all components in accordance with local and country-specific regulations, thus avoiding damage to the environment.
- Our packaging is made from environmentally friendly materials. They can be recycled and thus serve as valuable raw materials. Dispose of the packaging material (cardboard boxes, dirty packaging, etc.) separately and properly in accordance with the applicable national regulations.
- Contact the manufacturer if you are unsure about disposal.
- You can also obtain information on proper disposal from your local waste disposal centre.

Home Deluxe GmbH
Schanzeweg 2
32312 Lübbecke
Germany
Tel.: +49 (0)5743 6181-0
www.home-deluxe-gmbh.de

GA-032-00-ATHENE
2023/03